Hyundai Kona: Dual Clutch Transmission Control System / Inhibitor Switch Schematic diagrams

Circuit Diagram

transmissionmanuals.com

[Circuit Diagram]

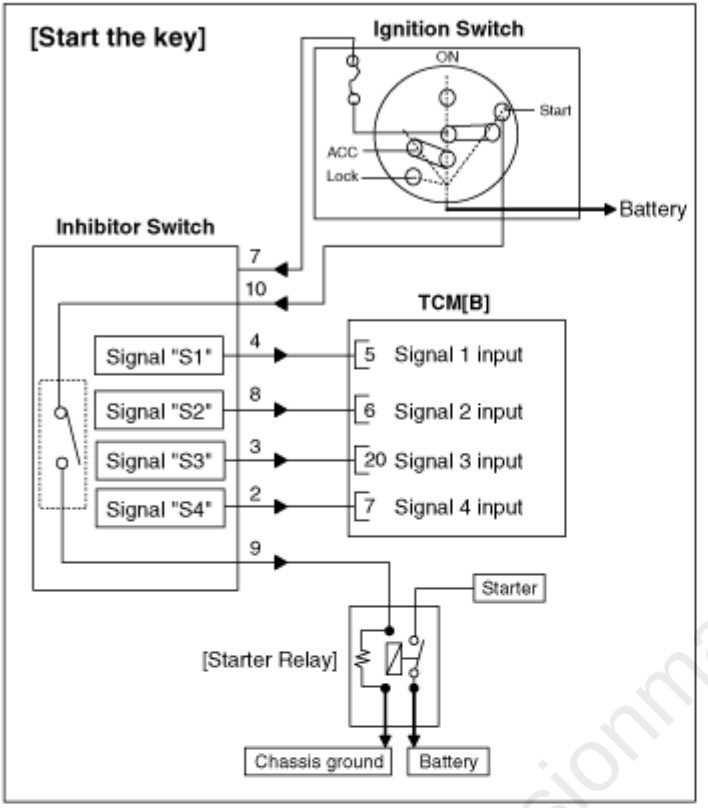

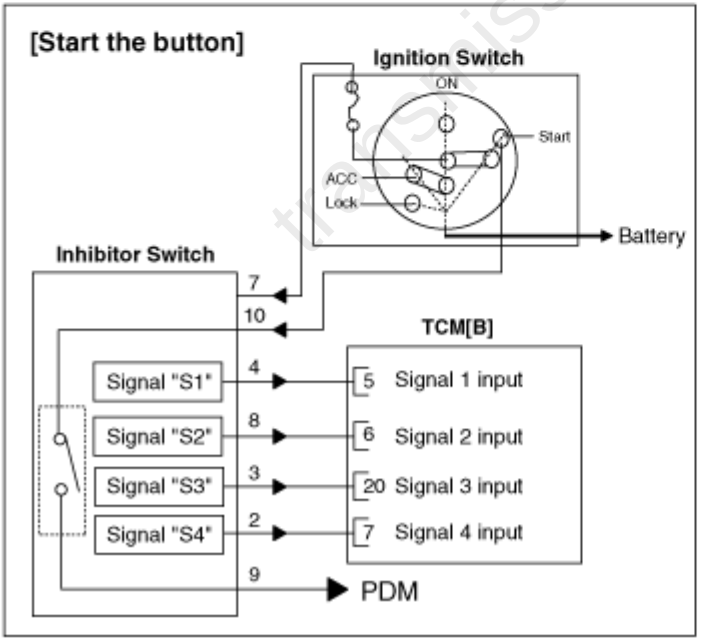

[Connection Information]

Terminal	Connected to	Function
8	TCM_B (6)	Signal 2 output
4	TCM_B (5)	Signal 1 output
3	TCM_B (20)	Signal 3 output
2	TCM_B (7)	Signal 4 output
7	VG1	Ignition ON input
10	VS	Start power (12V) input
9	Starter relay	Start signal output
	PDM(Button only)	Start signal output

[Harness Connector]



C501
Inhibitor Switch Connector

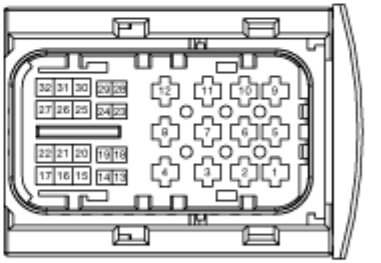

Connector [A]
TCM

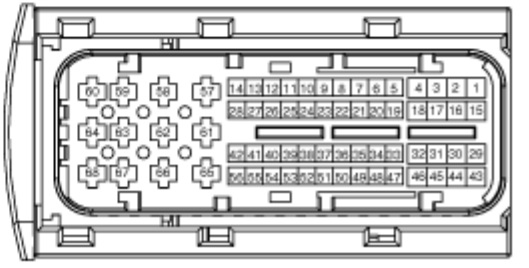

Connector [B]
TCM

transmissionmanuals.com